Exam Date & Time: 06-Aug-2022 (10:00 AM - 01:00 PM)

MANIPAL ACADEMY OF HIGHER EDUCATION

SECOND SEMESTER B.TECH. EXAMINATIONS (MIT MANIPAL) - AUGUST 2022
SUBJECT : CIE 1051 - MECHANICS OF SOLIDS
(MAKEUP)

MECHANICS OF SOLIDS [CIE 1051]

Marks: 50 **Duration: 180 mins.**

A

Answer all the questions.

1A) Locate the magnitude and direction of the resultant force for the force system shown in the figure below w.r.t the point A. (5)

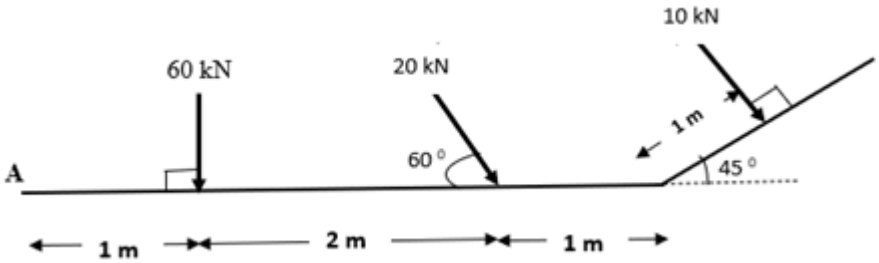

1B) A 4 m ladder weighing W_1= 1.3 kN is placed against a vertical wall as shown in the figure. As a man weighing W_2 = 0.8 kN reaches a point 3 m from A, the ladder is about to slip. Assuming that the coefficient of friction between the ladder and the wall is 0.2. Determine the coefficient of friction between the ladder and the floor. (5)

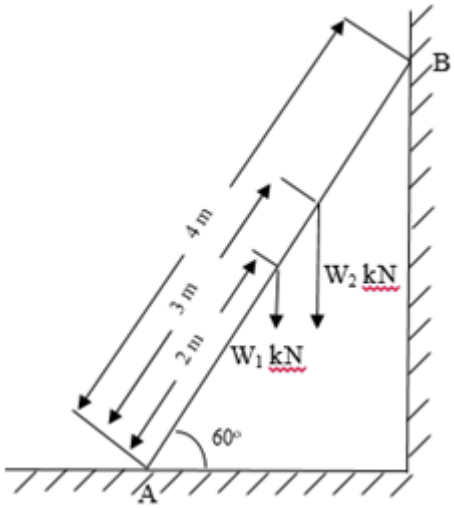

2A) Determine the support reactions for the given system of forces acting on the beam. (5)

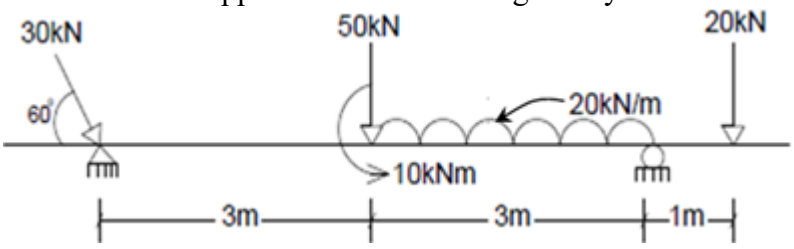

2B) (5)

Determine the second moment of area for the shaded region ABCD with respect to the axis OY.

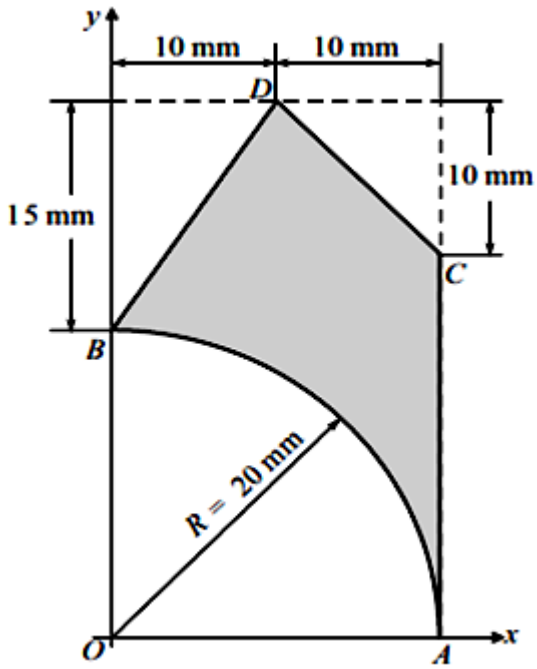

3A) Determine the centroid of the shaded region with respect to X-X and Y-Y axis as shown in the figure.

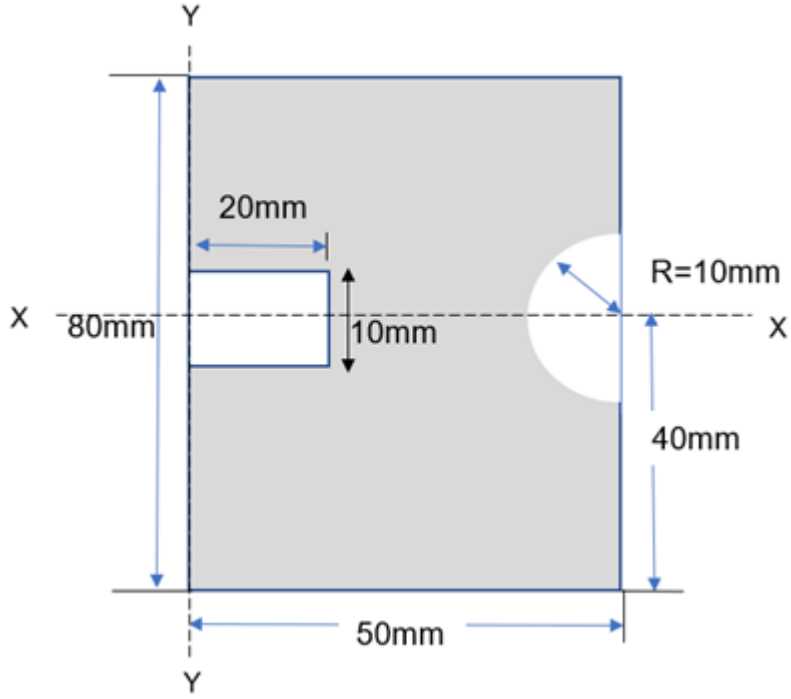

(5)

3B) A rectangular bar 600 mm long and 120mm x 50 mm in cross-section is subjected to forces as shown in the figure. Determine the force P acting along the Y direction given the change in dimension along X, Y, and, Z directions are 0.038 mm, 3.89×10^{-3} mm, and 4.35×10^{-5} mm respectively. Also, calculate the change in volume and the stress in three directions. Take E = 200 GPa, Poisson's ratio = 0.25.

(5)

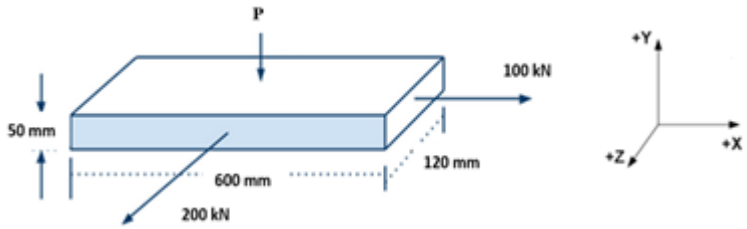

4A) i) Derive the relationship between direct stress and shear stress when an element is subjected to pure shear.
ii) Draw a typical stress-strain curve for a ductile material subjected to tensile test and mark the salient points. (5)

4B) A 1.2 m long steel bar has a uniform diameter of 25 mm for a length of 400 mm, in the next 0.4 m its diameter gradually reduces to 15 mm, and for the remaining 0.4 m length diameter remains 15 mm uniform as shown in the figure. If a load of P= 30 kN is applied at the ends, find the stresses in each section of the bar and the total extension of the bar. Take E = 205 GPa. (5)

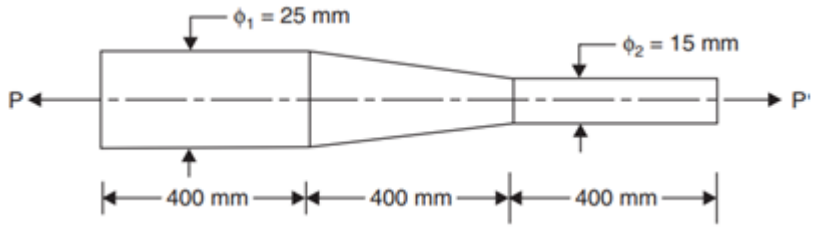

5A) A compound tube consists of a copper tube 160 mm external diameter and 140 mm internal diameter enclosed inside a steel tube of 180 mm external diameter and 160 mm internal diameter as shown. If the compound tube carries an axial load of 900 kN, find the stresses developed and the deformation in each tube. Take $E_s = 2 \times 10^5$ N/mm^2 and $E_c = 1 \times 10^5$ N/mm^2. (5)

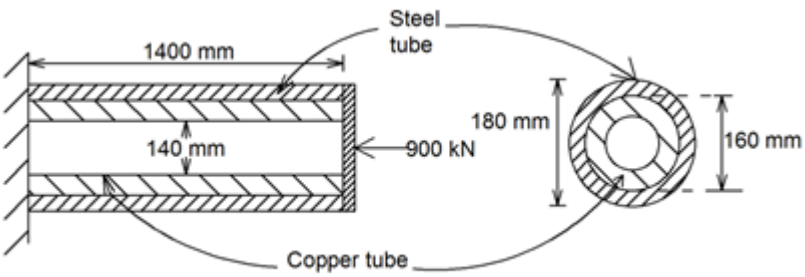

5B) A compound bar made up of steel and aluminum is held between two rigid supports as shown in the figure. The bars are stress-free at a temperature of 42°C. What will be the stresses in the two materials when the temperature increases to 66°C.
Take E_a = 70 GPa, E_s = 200 GPa, $\alpha_a = 24 \times 10^{-6}$ /°C, $\alpha_s = 12 \times 10^{-6}$ /°C, A_s = 160 mm^2 and A_a = 240 mm^2. (5)

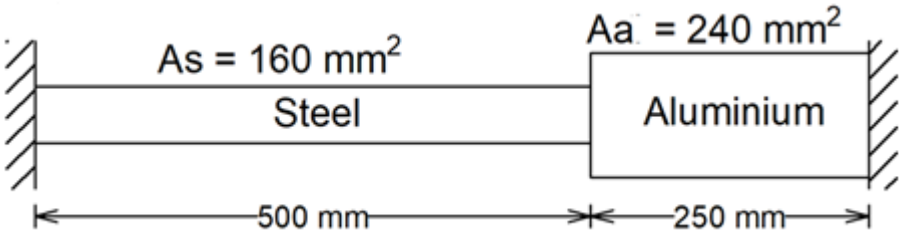

-----End-----